RICE HYDRO EQUIPMENT MFG., INC.
MANUFACTURER'S OPERATING INSTRUCTIONS-ELECTRIC POWERED
TEST PUMP MODEL TRE-6

FOR WARRANTY INFORMATION CALL (800)245-4777.

COMPONENTS:

1. 208-230/460 volt, 60 hz, 3 phase, 7 1/2 H.P., TEFC electric motor equipped with heavy duty switch box.
2. 2500 PSI, 4 GPM triplex ceramic plunger pump.
3. Manually operated unloader/bypass valve provides variable pressure settings up to 2500 PSI MAXIMUM. Bypass is directed back to the inlet side of the pump.
4. Stainless steel liquid-filled gauge for accurate readings.
5. 1/4 turn high pressure stainless steel ball valve to isolate output pressure.
6. High pressure needle valve assembly for bleeding of air and loss definition.
7. 1/2" X 8' high pressure discharge hose.

CONNECTING THE PUMP:

1. Check oil level in pump with dip stick provided. Use detergent 30 wt. oil as needed.
2. Connect a sound ¾" or larger hose to the female hose swivel on the inlet side of the pump. Pump requires a clean water supply. It is recommended that the unit be pressure fed. If pump is suction or gravity fed, the water source should be located as close to the pump as possible, 6-8 ft. maximum.
3. Connect the high pressure hose supplied to the pump and the line to be tested. One end has a swivel fitting for easy hook-up. The line to be tested should already be filled with water.
4. Open 1/4 turn ball valve on outlet side of pump.
5. Slightly open needle valve on outlet side of pump to relieve air from piping assembly. Close when water flows freely after opening supply line.
6. We recommend using a GROUND FAULT CIRCUIT INTERRUPTER (G.F.C.I.), it could save you life.

OPERATING THE PUMP:

1. Open the supply line feeding the pump or insure that suction hose is below water level in supply tank.
2. Turn motor on by engaging switch on the switch box.
3. The pressure regulator has been preset at the factory for 2500 PSI. If you wish to change this setting, loosen locknut, tighten the black handle to increase the output pressure. If adjustments are necessary the handle should be turned while there is no pressure indicated on the gauge.

4. Once test pressure has been reached the motor should be shut off and the ballvalve closed simultaneously. **NEVER LEAVE THE MOTOR RUNNING WITH THE BALLVALVE CLOSED.**
5. Check for any leaks at this time. If no leaks are found but a drop in pressure is indicated on the gauge, air in the lines is the probable cause.

REMEMBER THESE CAUTIONS:

1. Check oil level in pump prior to operating.
2. Use a sound 3/4" or larger supply hose.
3. Use a clean water supply to feed the pump.
4. NEVER run the pump dry.
5. NEVER continue to operate pump with ballvalve closed.
6. Flush system thoroughly after each use.
7. Protect the pump from freezing in cold climates, use anti-freeze or some suitable solution.

USING THE EXCLUSIVE RICE ENGINEERED FEATURE TO IDENTIFY LOSS

1. After test pressure is reached stop motor and close ball valve.
2. Note the pressure reading on the gauge. Wait the specified time and then note any pressure drop.
3. After noting the pressure at the end of the test period open the ball valve and pressurize the line back up to the original test pressure.
4. Shut off the motor and close the ball valve again. Now open the needle valve on the output assembly and draw out enough water to duplicate the pressure drop experienced during the test. Collect this water in a container so that it can be measured. By duplicating the pressure drop you have also duplicated the exact amount of water lost during the test period.

RECOMMENDED PERIODIC MAINTENANCE PROCEDURE

1. Change the oil in the pump body after the first 50 hours of operation thereafter every 250 hours.

INSTALLATION OF RUBBER SHOCK MOUNTS

1. 4-vibration absorbing rubber shock mounts are provided with the unit. Install these rubber mounts with the hardware provided in each corner of the base. Holes have been pre-drilled for this purpose.

Revised 3-1-2003

MD 4.0/20-S & MD 4.0/30-S

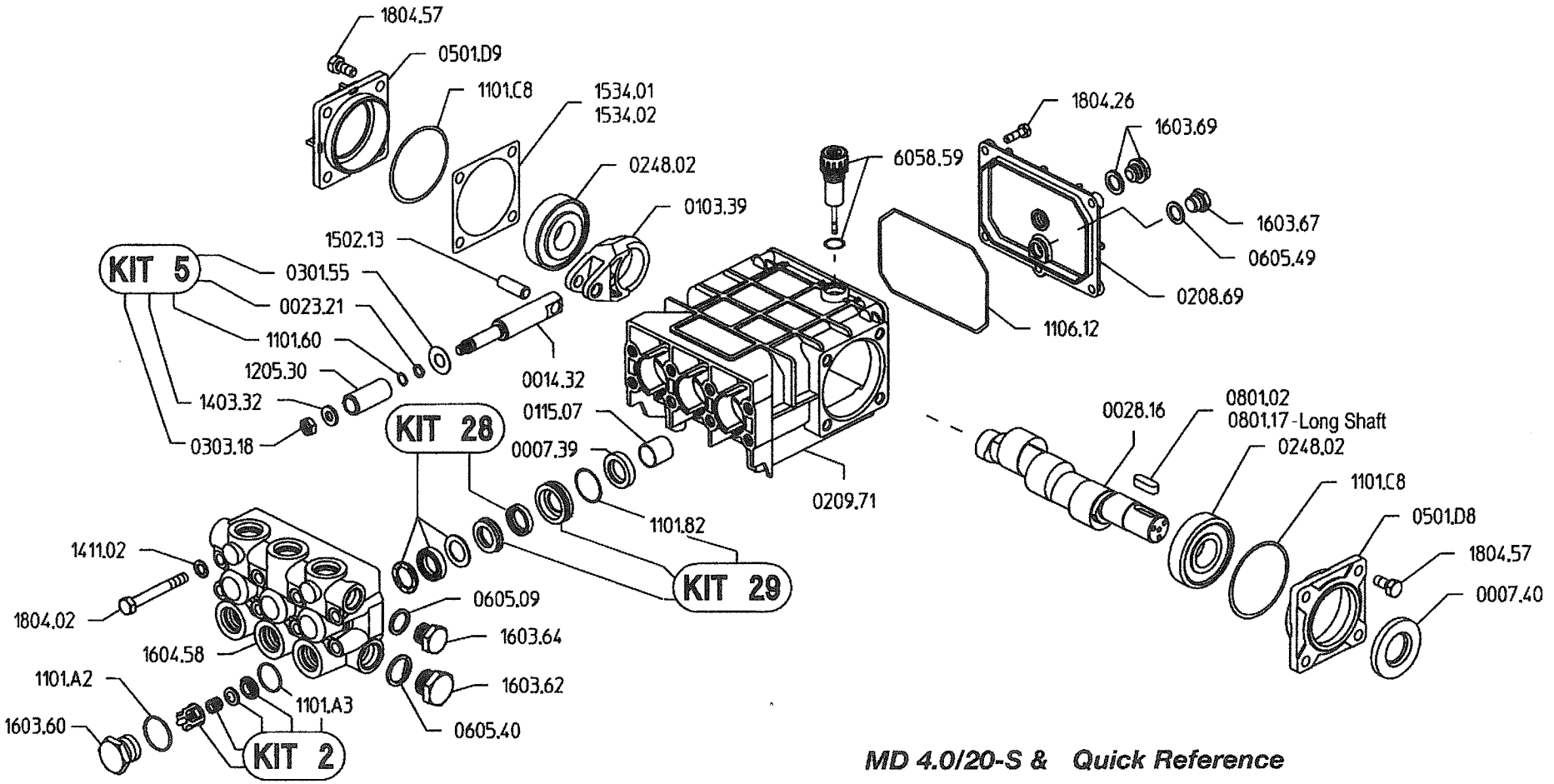

MD 4.0/20-S & Quick Reference

Maximum Flow .....4.0 GPM	Valve Kit 04-KIT UD-2
Max. Pressure MD 4.0/20-S....2000 PSI	Seal Kit.....04-KIT UD-28
MD 4.0/30-S....3000 PSI	Brass Kit 04-KIT UD-29
Rated Pump Speed .....1750 RPM	Plunger Bolt Kit 04-KIT UD-5
Oil Capacity.....20 oz. UDOR LUBE	Plunger Part # 04-1205.30
or SAE 30W Non-Detergent Oil	Plunger Diameter.....18 MM

PARTS BREAKDOWN FOR MODEL TRE6

RICE HYDRO, INC.

PART NUMBER	DESCRIPTION	QTY REQ'D
UD04-0007.39	CRANKCASE OIL SEAL	1
UD04-0007.40	SEAL	1
UD04-0014.32	PLUNGER ROD	3
UD04-0023.21	SUPPORT RING	3
UD04-0028.16	CRANKSHAFT	1
UD04-0103.39	ALUM CONNECTING ROD-M SERIES	3
UD04-0208.69	BACK COVER M SERIES	1
UD04-0209.71	CRANKCASE M & MKC SERIES	1
UD04-0248.02	BEARING	2
UD04-0301.55	SLINGER RING	3
UD04-0303.18	PLUNGER NUT	3
UD04-0501.D8	BEARING CAP	1
UD04-0501.D9	BEARING CAP	1
UD04-0602.77	BACK COVER GASKET	1
UD02-0605.09	GASKET	1
UD04-0605.40	WASHER	1
UD04-0605.49	WASHER	1
UD04-0801.17	KEY	1
UD04-0115.07	PISTON ROD GUIDE	6
UD04-1101.A2	O-RING	6
UD04-1101.A3	O-RING	6
UD04-1101.F6	O-RING	2
UD01-1101.60	O-RING	3
UD04-1101.82	O-RING	3
UD04-1205.30	PLUNGER 18 MM	3
UD04-1403.32	PLUNGER WASHER	3
UD04-1411.02	WASHER	8
UD04-1502.13	CONNECTING ROD PIN	3
UD04-1534.01	SHIM .003	1
UD04-1534.02	SHIM .010	1
UD04-1603.60	VALVE CAP M SERIES	6
UD04-1603.62	INLET-PLUG 3/4	1
UD04-1603.64	DISCHARGE PLUG 3/8	1
UD02-1603.67	PLUG	1
UD04-1603.69	SIGHT GLASS	1
UD04-1604.58	MANIFOLD	1
UD04-1804.02	BOLT	8
UD04-1804.26	BOLT	4
UD02-1804.57	BOLT	8
UD04-6058.59	DIPSTICK M & MK SERIES	1
MISC PARTS:		
HOSE-3/8X8-RH	8 FOOT OUTLET HOSE	1
HOSE-3/8-3000XFT	HIGH PRESSURE OUTLET HOSE CUSTOMER CAN SPECIFY LENGTH	8
FITTING-3/8-MPIPE	RIGID HOSE END	1
FITTING-3/8-MPX	SWIVEL HOSE END	1
BALLVALVE-7250-3/8	OUTLET BALLVALVE	1
UNLOADER-500/4000PSI	PRESSURE REGULATOR	1
LINESTRAINER-1/2	INLINE WATER STRAINER	1
GAUGE-3000	LIQUID FILLED GAUGE	1
NEEDLEVALVE-1/4	BLEED VALVE	1
HOSESWIVEL-1/2	INLET HOSE SWIVEL	1
MOTOR-7.5HP-3PH	ELECTRIC MOTOR	1
PUMP-4.0/30-S	TRIPLEX PLUNGER PUMP	1
COUPLERPLUG-S-3/8	Q/C FITTING	1
COUPLERBODY-S-3/8	Q/C FITTING	1
KITS:		
UD04-KIT-UD2	VALVE KIT M SERIES	
UD04-KIT-UD5	PLUNGER O-RING KIT M SERIES	
UD04-KIT-UD28	SEAL KIT-M 18 MM	
UD04-KIT-UD29	BRASS KIT-M 18MM	